Compact EasyRiser Advantages:

- Patented design offers a total travel range of 6″ (152 mm)
- Independent tilt adjustment (±15˚) maintains the selected tilt angle throughout the travel range
- Slim profile allows for maximum knee clearance when in use or retracted
- Spring assisted design provides effortless height adjustment
- 360˚ rear swivel for optimal keyboard tray positioning and easy storage
- Offers every advantage of the EasyRiserbut with a shorter mechanism for stowing on shallow desk returns
- Available in durable black powder coat (standard), or with a choice of custom colors
- Installation hardware and instructions included
- Exceeds ANSI/BIFMA X5.5, 1998 industry performance standard
- Lifetime warranty

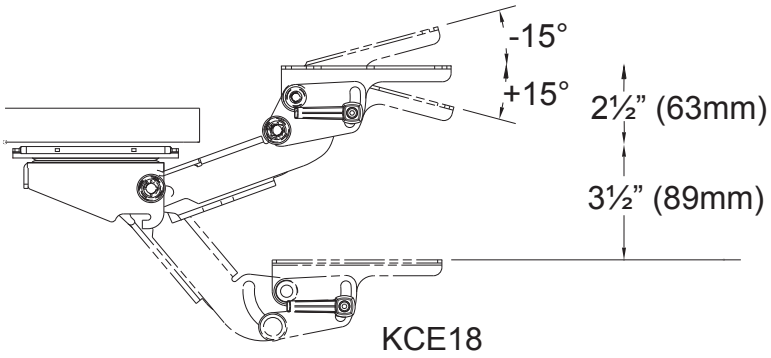

COMPACT EASYRISER SPECIFICATIONS

HEIGHT ADJUSTMENT	
UP	2½" (63 mm)
DOWN	3½" (88 mm)
TOTAL	6" (152 mm)
HEIGHT SET	LIFT AND RELEASE
±15˚ TILT SET BY	KNOB
360˚ SWIVEL	YES
FULLY RETRACTABLE	YES, 17¾" (450 mm) STANDARD
ANSI/BIFMA X5.5 1998	YES, EXCEEDS
MATERIAL	STEEL
FINISH	TEXTURED BLACK POWDER COAT

TRACK OPTIONS

17½" (450 mm) GLIDE TRACK PROVIDES COMPLETE RETRACTABILITY
NON-STANDARD TRACK LENGTHS ARE AVAILABLE UPON REQUEST

TRACKS CAN BE CUT ON SITE WITH PROPER HAND TOOLS TO ADJUST FOR DIFFERENT MOUNTING CONDITIONS

FRONT SWIVEL OPTION
25396

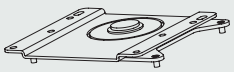

OPTIONAL FRONT SWIVEL TURNS THE EASYRISER™ INTO A DUAL SWIVEL™ FOR INCREASED MOBILITY.

ERGONOMIC ACCESSORIES INC.
15 West Pearce St. Unit 11
Richmond Hill, ON L4B 1H6
(905) 764-5228
www.eaergo.com